Current part is item (3) on diagram. Available at www.oshkoshequipment.com

(1) SMR Code	(2) Federal Stock Number	(3) DESCRIPTION Reference Number & Mfr. Code	Usable On Code	UNIT of meas	(5) Qty inc. in Unit	(6) 30-day DS maint allowance (a) 1-20	(b) 21-50	(c) 51-100	(7) 30-day GS maint allowance (a) 1-20	(b) 21-50	(c) 51-100	(8) 1-yr alw per 100 equip cnt-gcy	(9) Depot maint alw per 100 equip	(10) Illustration (a) Figure No.	(b) Item No.
		COMPOSED OF:													
PAOZZ	2930-901-8663	GASKET: WATER PUMP MTG 10889854 (19207)		EA	1	*	*	*	*	*	*	*	*	28	10
KFOZZ		PUMP, ENGINE COOLANT: 10951101 (19207)		EA	1	*	*	*	*	*	*	*	*	28	11
PAOZZ	5310-880-7744	NUT, PLAIN, HEXAGON : COOLING TUBE MTG MS51967-5 (19207)		EA	4	*	*	*	*	*	*	*	*	28	2
PAOZZ	5310-959-4679	WASHER, LOCK: COOLING TUBE MTG MS35340-45 (96906)		EA	4	*	*	*	*	*	*	*	*	28	3
PAOZZ	5307-880-1156	STUD, PLAIN: COOLING UNIT TUBE MTG 10899073-4 (19207)		EA	4	*	*	*	*	*	*	*	*	28	12
PAOZZ	2930-899-7883	GASKET: WATER TUBE INLET MTG 10889851 (19207)		EA	1	*	*	*	*	*	*	*	*	28	13
PAOZZ	2930-453-5377	TUBE, COOLING UNIT: PUMP INLET 10899032 (19207)		EA	1	*	*	*	*	*	*	*	*	28	14
PAOZZ	4730-541-7747	CLAMP, HOSE: INLET HOSE AN737TW74-91 (88044)		EA	6	*	*	*	*	*	*	*	*	28	15
MOOZZ		HOSE, RUBBER: COOLER TUBE MANUFACTURE FROM:		EA	3									28	16
PAOZZ	4720-200-0632	HOSE, NONMETALLIC: (3-1/4 IN. REQUIRED FOR EA HOSE) ZZH428 (81348)		FT	V	SEE GROUP 9501								28	16
PADZZ	5310-959-4675	WASHER, LOCK: WATER PUMP MTG TO CRANK-CASE MS35340-46 (96906)		EA	5							*	*	28	17
PADZZ	5306-850-3993	BOLT,MACHINE: WATER PUMP MTG TO CRANK-CASE 7748976 (19207)		EA	3							*	*	28	18
PAOZZ	4710-133-8174	TUBE, BENT, STEEL: WATER PUMP TO OIL COOLER 10935616 (19207)		EA	1	*	*	*	*	*	*	*	*	28	19
		0505-FAN ASSEMBLY													
PAOZZ	5306-225-8500	BOLT, MACHINE: FAN MTG MS90725-35 (96906)		EA	4	*	*	*	*	*	*	*	*	29	1
PAOZZ	5310-959-4679	WASHER, LOCK: FAN MTG MS35340-45 (96906)		EA	4	*	*	*	*	*	*	*	*	29	2
PAOZZ	2930-113-0768	IMPELLER, FAN, AXIAL: ENGINE COOLING 11641747 (19207)		EA	1	*	*	*	*	*	*	*	*	29	3
PAOZZ	3030-863-7738	BELTS, V. MATCHED SET: FAN AND GENERATOR 5702650 (19207)		EA	1	*	*	*	*	*	*	*	*	29	4
		COMPOSED OF:													
		2-BELT: 10889856 (19207)												29	4
		GROUP 06-ELECTRICAL SYSTEM													
		0601-GENERATOR													
PAOZZ	5305-269-3210	SCREW, CAP, HEXAGON HEAD: ADJUSTING STRAP MTG MS90725-59 (96906)		EA	1	*	*	*	*	*	*	*	*	30	1

Current part is item (3) on diagram. Available at www.oshkoshequipment.com

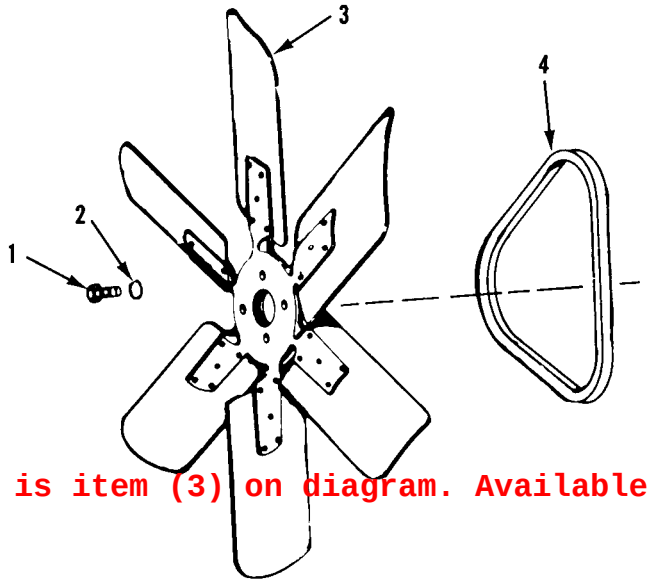

Current part is item (3) on diagram. Available at www.oshkoshequipm

TA010736

Figure 29. Engine Cooling Fan and Belt.

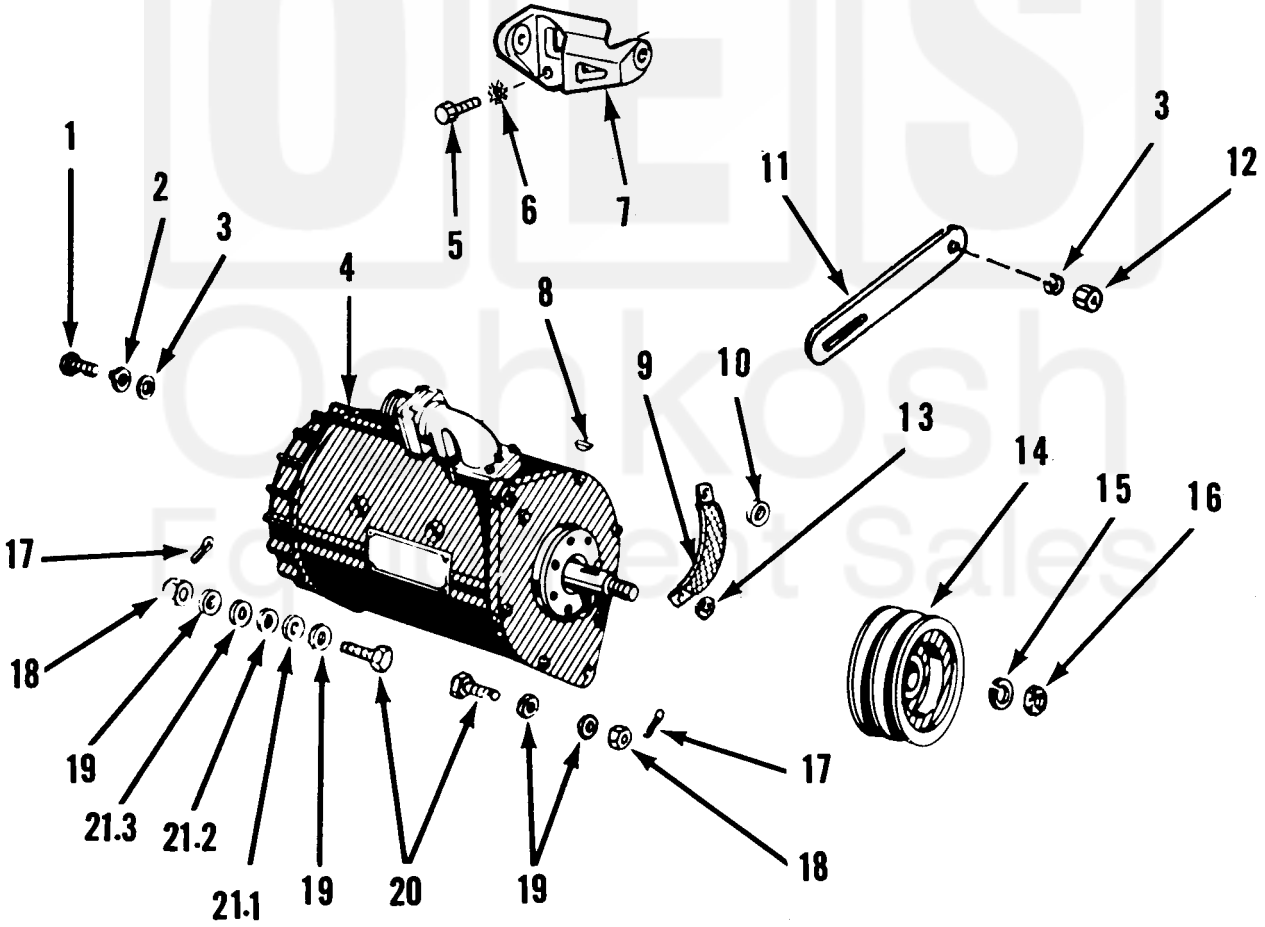

TA010737

Figure 30. Generator and Associated Parts.

Current part is item (3) on diagram. Available at www.oshkoshequipm